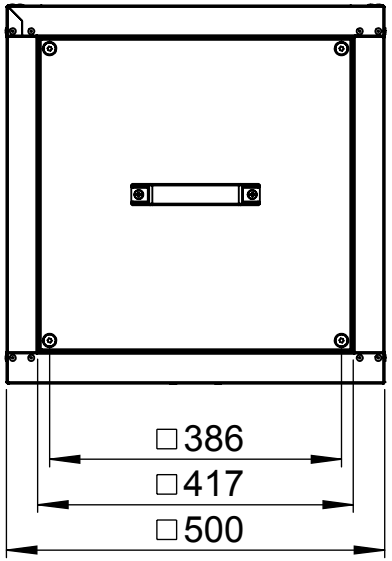

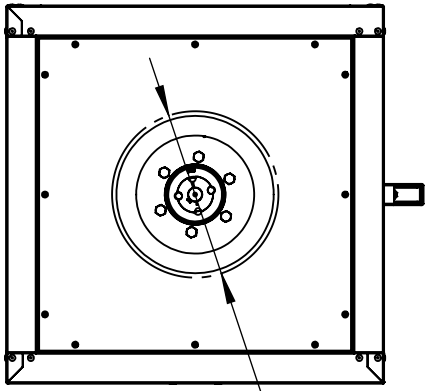

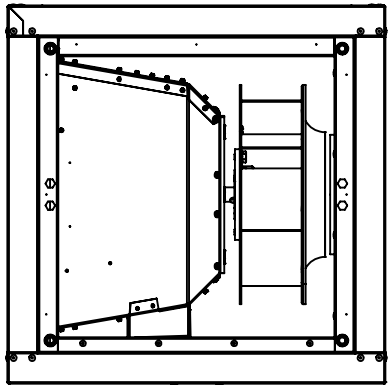

Anschlussmaß innen
min. ∅220
Connection size inside
min. ∅220

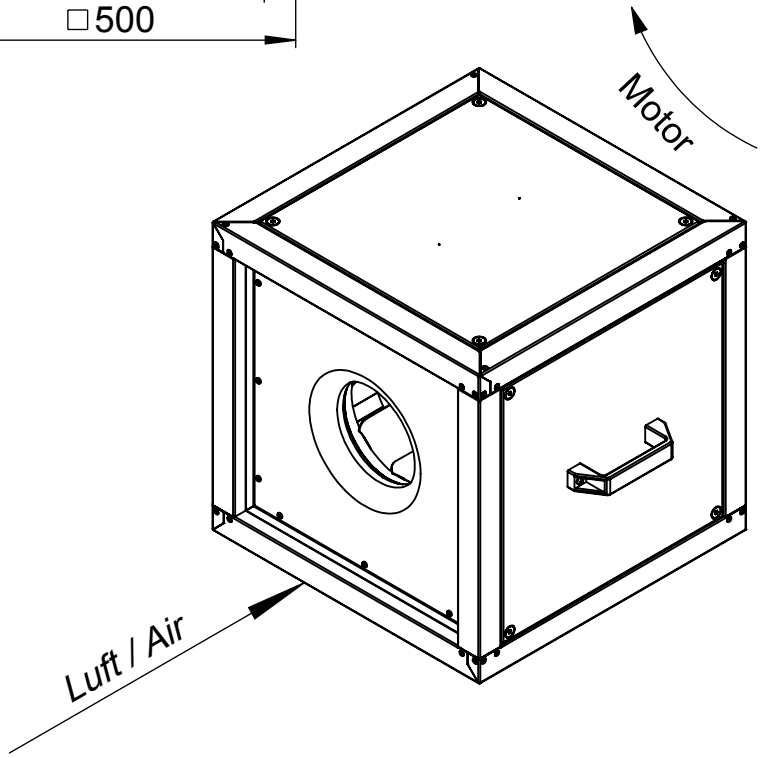

ruck.eu VENTILATOREN

ruck Ventilatoren
Max-Planck-Str. 5
D-97944 Boxberg

1:10 A4 mm

Protection Mark according to ISO16016

General tolerances DIN ISO 2768-c

Created	s.pop	28.08.2017
Drawn	s.pop	28.08.2017
Released		
Disabled		

MPC250E2T20+

126679 02